RA220 ENSEMBLE DE TROIS BOITIERS

RA220 SET OF THREE GEARBOXES

825 - 850 MM + Lateral Output

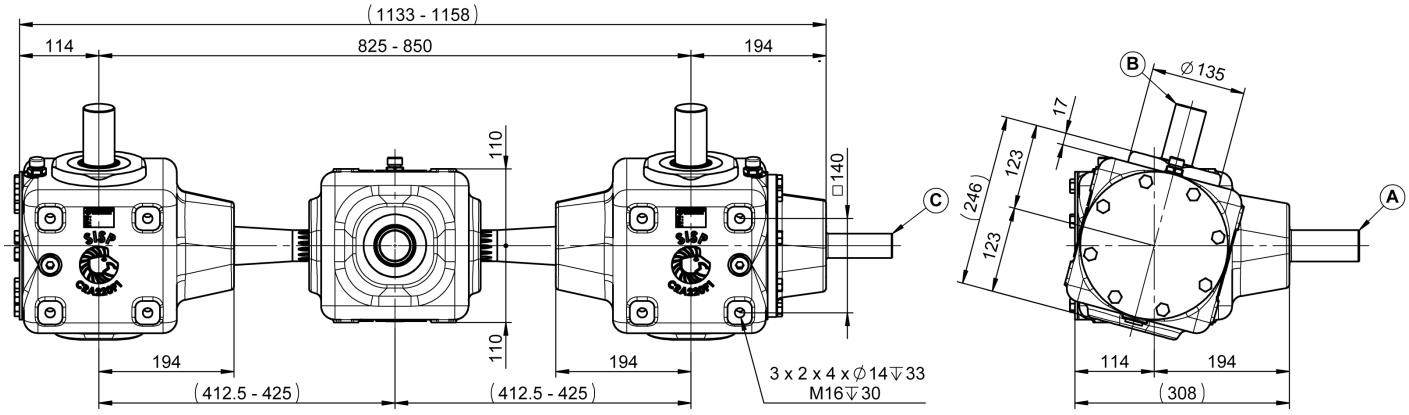

2 L x3
TM80W90

A
1"3/8 (6) - 1"3/4 (6)
1"3/4 (20)

B
Ø45 (16) - Ø55 (20)
Ø45 - Ø50

N° P5

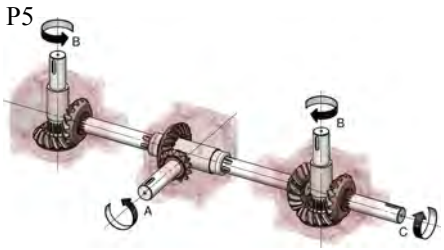

Angle variable / Variable angle

C
1"3/8 (6) - 1"3/4 (6)

154 KG

ENTRAXE VARIABLE 825 A 850 MM STANDARD / VARIABLE ENTRAXE FROM 825 TO 850 MM STANDARD								
RAPPORT RATIO	A				B		C	
	T/MN - RPM	CV - HP	KW	NM	T/MN - RPM	NM	T/MN - RPM	NM
1/1.29	540	139	102	1841	420	2367	540	1565
1/1.54		124	91	1638	351	2520	540	1393
1/2.08		95	70	1259	259	2620	399	1448
1/1.54	1000	169	124	1209	650	1860	1000	1028
1/2.08		162	119	1160	480	2414	739	1333
1/2.37		144	106	1033	423	2445	650	1351
1/2.81		126	92	899	355	2535	545	1401
ENTRAXE VARIABLE 825 A 850 MM RENFORCE / VARIABLE ENTRAXE FROM 825 TO 850 MM REINFORCED								
1/1.54	540	165	121	2188	351	3366	540	1859
1/2.08		127	94	1684	259	3505	399	1779
1/1.54	1000	225	166	1611	650	2478	1000	1369
1/2.08		216	159	1547	480	3219	739	1779
1/2.37		192	141	1375	423	3254	650	1798
1/2.81		168	124	1203	355	3393	545	1875